N.Y.C. VENTILATION INDEX (NEW CODE)

ROOM	AREA ÷ 10	VOLUME	NO. OF PEOPLE	VENTILATION INDEX	REQ'D CFM SUPPLY	REQ'D CFM EXHAUST	DESIGN CFM SUPPLY	DESIGN CFM EXHAUST	O.A. REQ'D	O.A. ACTUAL
BND TRADING RM.	6225	5651	21	522	591	591	665	665	199	221

AC-9 IS A RECIRCULATING AIR CONDITIONING SYSTEM MIN. OUTSIDE AIR EQUALS TO 33.3% REQ'D AIR FOR BUILDING INTERIOR (INDUCTION UNIT AIR SUPPLY.

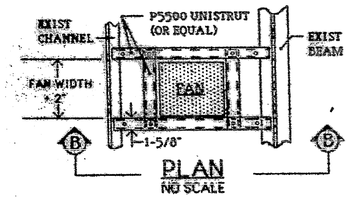

PLAN
NO SCALE

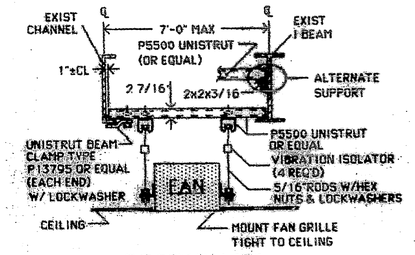

SECTION 'B'
NOT TO SCALE

FAN HANGING DETAIL CEF #1

LEGEND

- EXIST. DUCTWORK
- NEW DUCTWORK
- EXIST. DOUBLE POUCH
- EXIST. DOUBLE POUCH - REMOVE
- NEW OR RELOCATED DOUBLE POUCH
- 7"ø FLEXIBLE CONNECTION - NEW OR RELOCATED
- CEILING DIFFUSER
- VOLUME DAMPER
- AC UNIT — AIR CONDITIONING UNIT
- (000) — NO. OF CFM - BALANCE
- ACWS — AUXILLIARY COOLING WATER - SUPPLY
- ACWR — AUXILLIARY COOLING WATER - RETURN
- EXIST. FULL CAPACITY INDUCTION UNIT
- EXIST. FULL CAPACITY INDUCTION UNIT OPERATING @ HALF CAPACITY
- EXIST. ONE & ONE HALF CAPACITY INDUCTION UNIT
- CEF — CEILING EXHAUST FAN

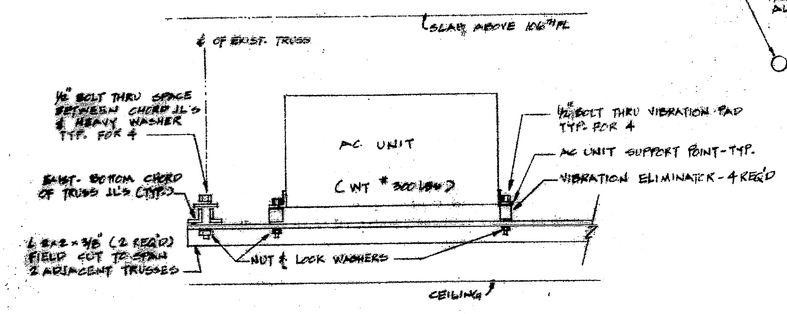

A.C. UNIT HANGING DETAIL
NO SCALE

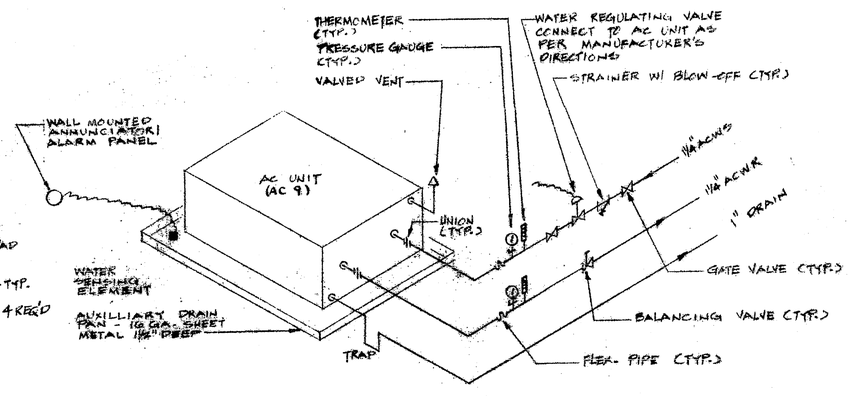

A.C. UNIT PIPING SCHEMATIC
NO SCALE

AS-BUILT DRAWING
DATE 5/22/84
MARKED BY Bellay for R Bauman

Robert A. Bauman 5-6-85

REV.	DATE	BY	DESCRIPTION
1	1-16	FC	AS PER DA COMMENTS

NEW CORPORATE AND TRADING FLOOR
CANTOR FITZGERALD SECURITIES CORP
ONE WORLD TRADE CENTER FLOOR 105
NEW YORK, N.Y. 10048

MECHANICAL LEGEND & DETAILS

JOHN C. WESTRICK & ASSOCIATES
CONSULTING ENGINEERS
2110 MAPLE AVENUE
SOUTH PLAINFIELD, N.J. 07080

JOB # 84-17 | SCALE: AS SHOWN
CHK BY: J.W. | DATE: 10-16-84

M-2